Kunststoffspiralband Plastic spiral binding

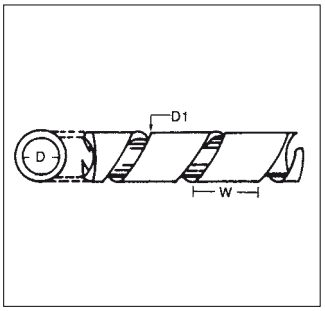

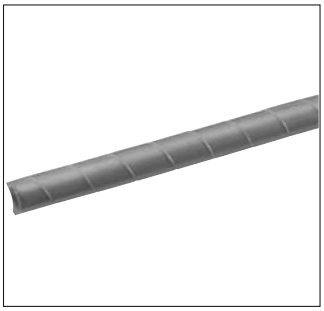

RoHS

Material:
Polyethylen PE

Temperaturbereich:
-40°C bis 85°C

Farbe(n)/Ausführungen:
- Schwarz
- Transparent

Material:
Polyethylene PE

Temperature range:
-40°C to 85°C

Colour(s)/Designs:
- Black
- Transparent

2.2

Typ Type	D mm D mm	Stärke D1 mm Thickness D1 mm	Breite W mm Width W mm	Ø Bündel mm Ø Bundle mm	Art.-Nr. transparent Art. no. transparent	Art.-Nr. schwarz Art. no. black	VE m PU m
SB - 6	5,0	6,0	7,0	4,0 - 50,0	1800206	1800256	10
SB - 8	7,0	8,0	10,8	6,0 - 60,0	1800208	1800258	10
SB - 10	8,5	10,0	11,4	7,5 - 60,0	1800210	1800260	10
SB - 12	10,2	12,0	13,9	9,0 - 65,0	1800212	1800262	10
SB - 15	13,0	15,0	15,0	12,0 - 70,0	1800215	1800265	10
SB - 19	16,4	19,0	18,2	15,0 - 100,0	1800219	1800269	10
SB - 24	21,0	24,0	19,6	20,0 - 130,0	1800224	1800274	10